Potential Difference

Exam code: 0625 & 0972

Download PDF

Written by: Katie M
Reviewed by: Caroline Carroll
Updated on 30 September 2024

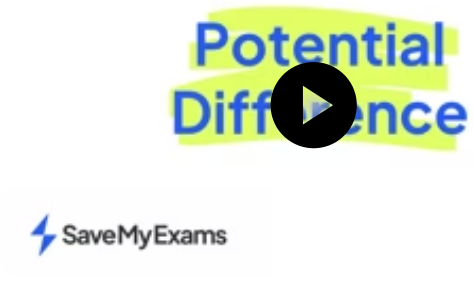

Did this video help you? Yes No

Potential difference

- Potential difference is defined as:

The work done by a unit charge passing through a component

- Potential difference is measured in units of **volts (V)**
- The potential difference between two points in a circuit is related to the amount of **energy transferred** between those points

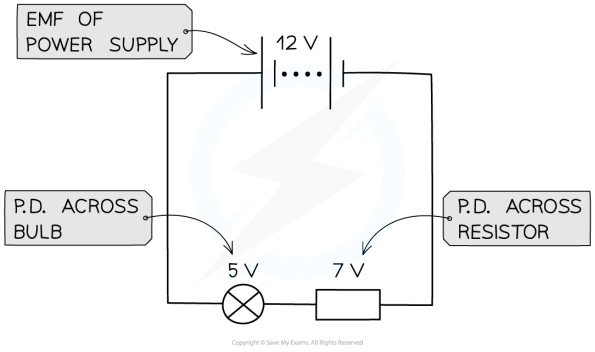

The potential difference is the difference in the electrical potential across each component: 5 volts for the bulb (on the left) and 7 volts for the resistor (on the right)

Help me understand

Stuck on something?
Ask questions and get help with exactly what you're revising.
Got it

- As electrons flow through a circuit, they **lose** energy
  - For example, after leaving the 12 V cell, each coulomb of charge will transfer 12 J of energy to the wires and components in the circuit

Did this video help you? Yes No

Measuring potential difference

- Potential difference can be measured using a **voltmeter**
- Voltmeters must be set up in **parallel** with the component being measured
  - This is because potential difference is the **difference** in electrical potential between two points
  - Therefore, a voltmeter has to be connected to **two points** in the circuit

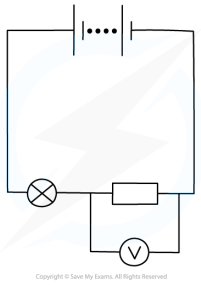

Potential difference can be measured by connecting a voltmeter in parallel between two points in a circuit

- Voltmeters can be
  - digital (with an electronic read out)
  - analogue (with a needle and scale)

Analogue voltmeters

- Analogue voltmeters are subject to **parallax error**

- Typical ranges are 0.1–1.0 V and 0–5.0 V for analogue voltmeters although they can vary
  - Always double-check exactly where the marker is before an experiment, if not at zero, you will need to subtract this from all your measurements
  - They should be checked for **zero errors** before using

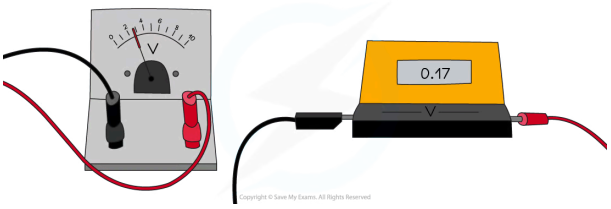

Voltmeters can be either analogue (with a scale and needle) or digital (with electronic read-out)

Digital voltmeters

- Digital voltmeters can measure very small potential differences, in mV or μV
- Digital displays show the measured values as digits and are more accurate than analogue displays
- They're easy to use because they give a specific value and are capable of displaying more precise values
  - However digital displays may 'flicker' back and forth between values and a judgement must be made as to which to write down

- Digital voltmeters should be checked for **zero error**
  - Make sure the reading is zero before starting an experiment, or subtract the "zero" value from the end results

Examiner Tips and Tricks

When you are building a circuit in class, always **connect the voltmeter last.** Make the whole circuit first and check it works.

Only then pick up the voltmeter. Connect two leads to your voltmeter. Now connect the leads so that they are one on each side of the component you are measuring. This will save you a lot of time waiting for your teacher to troubleshoot your circuit!

You might sometimes see potential difference called voltage. Both mean the same thing, but it is best to use the term potential difference. This can be particularly useful when thinking about voltmeters as the potential difference describes a **difference** between **two** points, therefore the voltmeter has to be connected between **two** points in the circuit.

difference

Extended tier only

- Potential difference, energy transferred and charge are related by the equation:

$$V = \frac{W}{Q}$$

- Where:
  - V = potential difference, measured in volts (V)
  - W = energy transferred to the components, measured in joules (J)
  - Q = charge moved, measured in coulombs (C)
- One volt is equivalent to the transfer of 1 joule of electrical energy by 1 coulomb of charge, or 1 V = 1 J/C
- This can be rearranged using the formula triangle below:

Energy charge and potential difference formula triangle

Formula triangle for the energy transferred, voltage and charge equation

- Check out this revision note on speed, distance and time if you need a reminder on how to use formula triangles

Worked Example

The normal operating voltage for a lamp is 6 V.

Calculate how much energy is transferred in the lamp when 4200 C of charge flows through it.

Answer:

Step 1: List the known quantities

- Voltage, V = 6 V
- Charge, Q = 4200 C

Step 2: State the equation linking potential difference, energy and charge

$$V = \frac{W}{Q}$$

Step 3: Rearrange the equation and substitute the known values

$$W = V \times Q$$

$$W = 6 \times 4200 = 25\,200 \text{ J}$$

- Therefore, **25 200 J** of energy is transferred in the lamp

Examiner Tips and Tricks

Don't be confused by the symbol for voltage (the **symbol** *V*) being the same as its unit (the **volt**, V). Remember that one volt is equivalent to 'a joule per coulomb'.

Make sure to learn this equation and understand how it is similar (and different) to the equation for e.m.f.

Teacher only

New! Exclusive Teacher-Only Questions

- Fresh, expert-written questions
- Students can't access them
- Fair accurate tests - built fast

Explore in Test Builder

Scholarship
Join
Past Papers
Solution Banks
Sitemap

Brand ambassador
Profile
Subscription
Settings
Log out

Company
About us
Exam Specificity
Content Quality
Promotions
Jobs
Terms
Privacy
Cookie Policy
Help and Support

Subjects
Biology
Chemistry
Physics
Maths
Geography
English Literature
Psychology
All Subjects

© Copyright 2015–2026 Save My Exams Ltd. All Rights Reserved.
Neither IBO nor College Board were involved in the production of, and do not endorse, the resources created by Save My Exams.